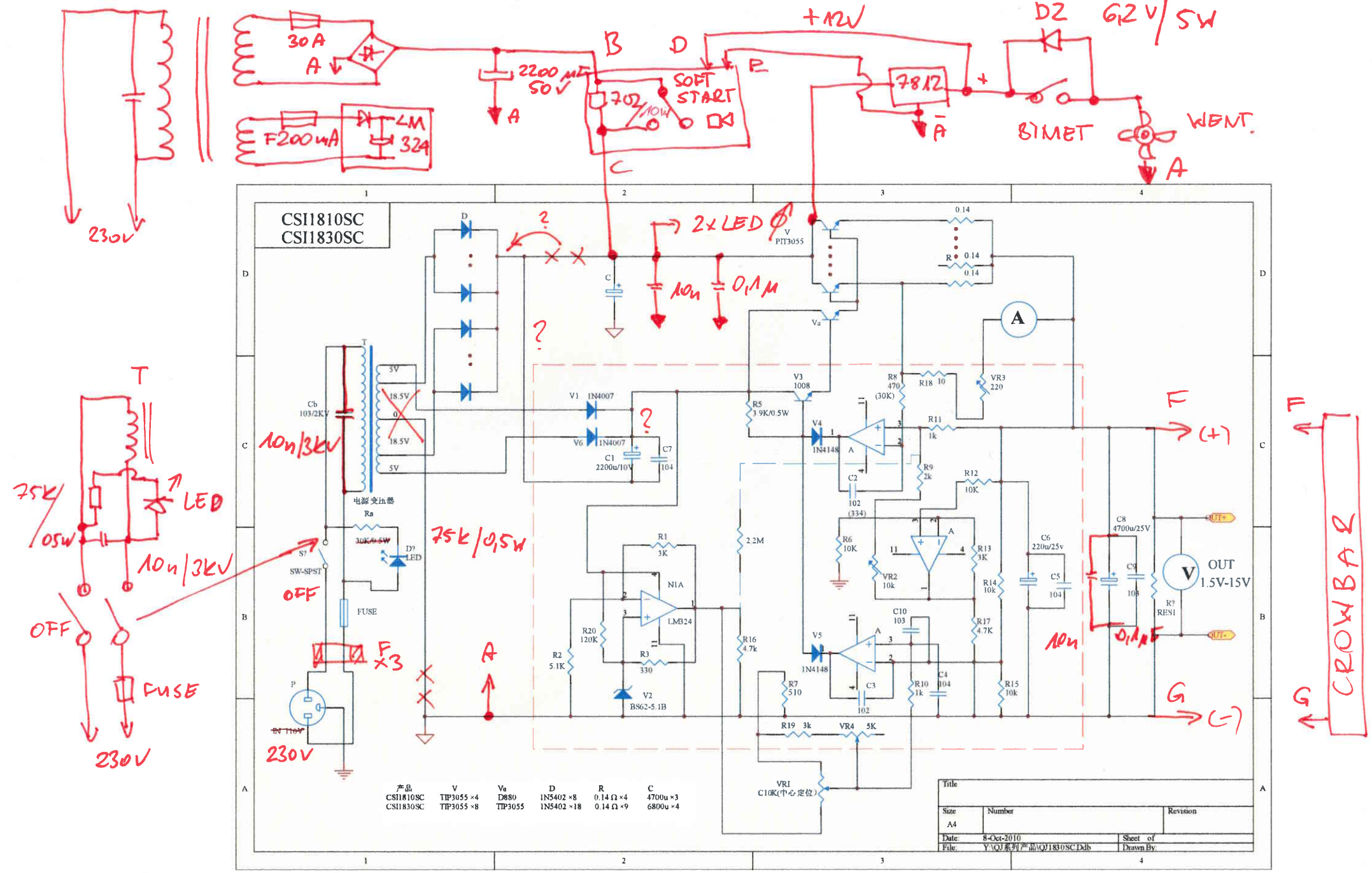

CSI1810SC
CSI1830SC
230V
30A
A
F200mA
LM 324
2200µF 50V
B
D
SOFT START
702/10W
C
+12V
7812
D2
6,2V/5W
BIMET
WENT.
2x LED
10n
0,1µ
V PIT3055
0.14
R 0.14
0.14
Va
A
V3 1008
R8 470 (30K)
R18 10
VR3 220
R5 3.9K/0.5W
V4 1N4148
R11 1k
R9 2k
C2 102 (334)
R12 10K
R6 10K
VR2 10k
R13 3K
R14 10k
C6 220u/25v
C5 104
C8 4700u/25V
C9 108
R? RES1
OUT 1.5V-15V
OUT+
OUT-
V5 1N4148
C10 103
R17 4.7K
C3 102
R10 1k
C4 104
R15 10k
R7 510
R19 3k
VR4 5K
VR1 C10K(中心定位)
R16 4.7k
2.2M
V1 1N4007
V6 1N4007
C1 2200u/10V
C7 104
R1 3K
N1A
LM324
R20 120K
R2 5.1K
R3 330
V2 BS62-5.1B
Cb 103/2KV
电源变压器
Ra 30K/0.5W
D? LED
S? SW-SPST
FUSE
P
IN 110V
75k/0,5W
10n/3kV
OFF
F x3
F (+)
G (-)
CROWBAR
T
75k/05W
LED
10n/3kV
OFF
FUSE
230V
产品 V Va D R C
CSI1810SC TIP3055 ×4 D880 1N5402 ×8 0.14 Ω ×4 4700u ×3
CSI1830SC TIP3055 ×8 TIP3055 1N5402 ×18 0.14 Ω ×9 6800u ×4
Title
Size A4
Number
Revision
Date: 8-Oct-2010
Sheet of
File: Y:\QJ系列产品\QJ1830SC.Ddb
Drawn By: