PA AMP QRP & DRIVER QRO

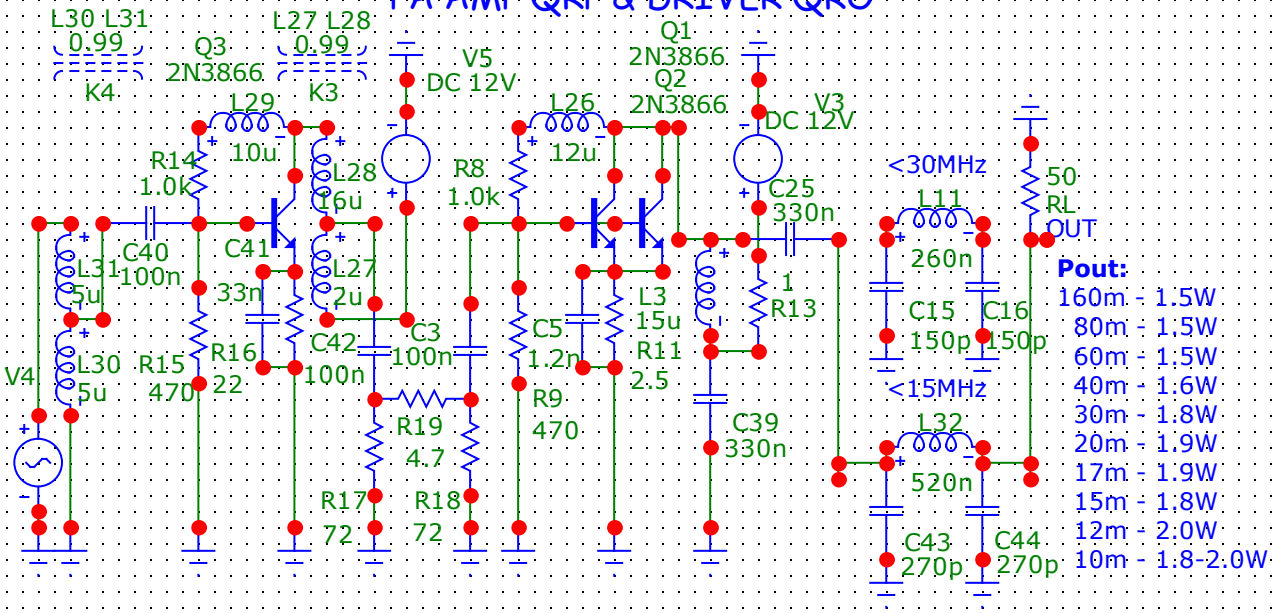

Pout:

160m - 1.5W
80m - 1.5W
60m - 1.5W
40m - 1.6W
30m - 1.8W
20m - 1.9W
17m - 1.9W
15m - 1.8W
12m - 2.0W
10m - 1.8-2.0W