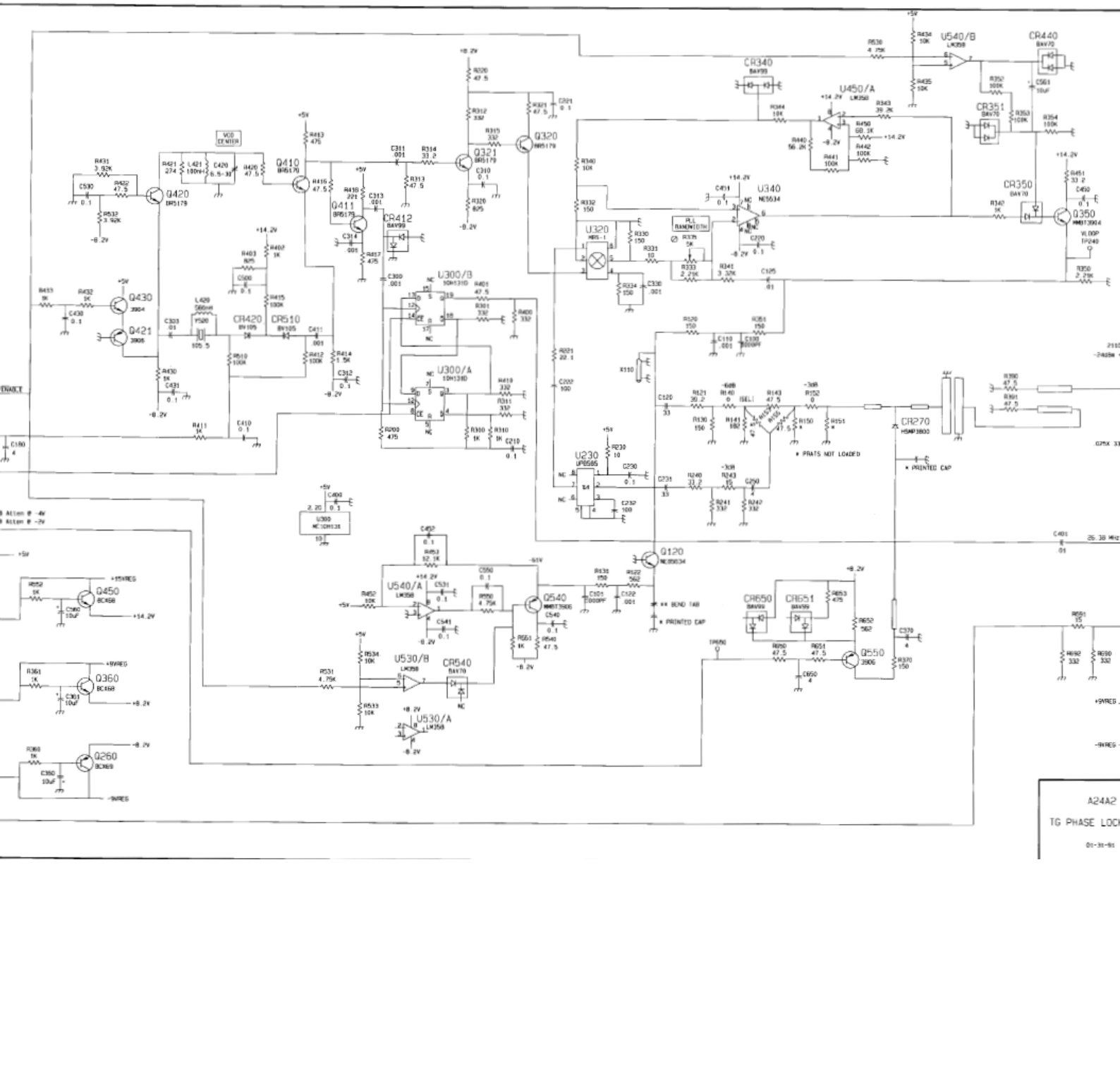

U540/B
LM358
CR440
BAV70
CR340
BAV99
U450/A
LM358
CR351
BAV70
CR350
BAV70
Q350
MMBT3904
VLOOP
TP240
U340
NE5534
PLL
RANGEWIDTH
U320
MRS-1
Q320
BR5179
Q321
BR5179
Q410
BR5179
Q411
BR5179
CR412
BAV99
VCO
CENTER
Q420
BR5179
Q430
3904
Q421
3906
CR420
BV105
CR510
BV105
U300/B
10H131D
U300/A
10H131D
U300
MC10H131
U230
UPB585
CR270
HSMP3800
* PRATS NOT LOADED
* PRINTED CAP
Q120
NE5534
** BEND TAB
* PRINTED CAP
U540/A
LM358
Q540
MMBT3906
U530/B
LM358
CR540
BAV70
U530/A
LM358
CR650
BAV99
CR651
BAV99
Q550
3906
Q450
BCX68
Q360
BCX68
Q260
BCX69
+15VREG
+9VREG
-9VREG
+9VREG
-9VREG
A24A2
TG PHASE LOCK
01-31-91