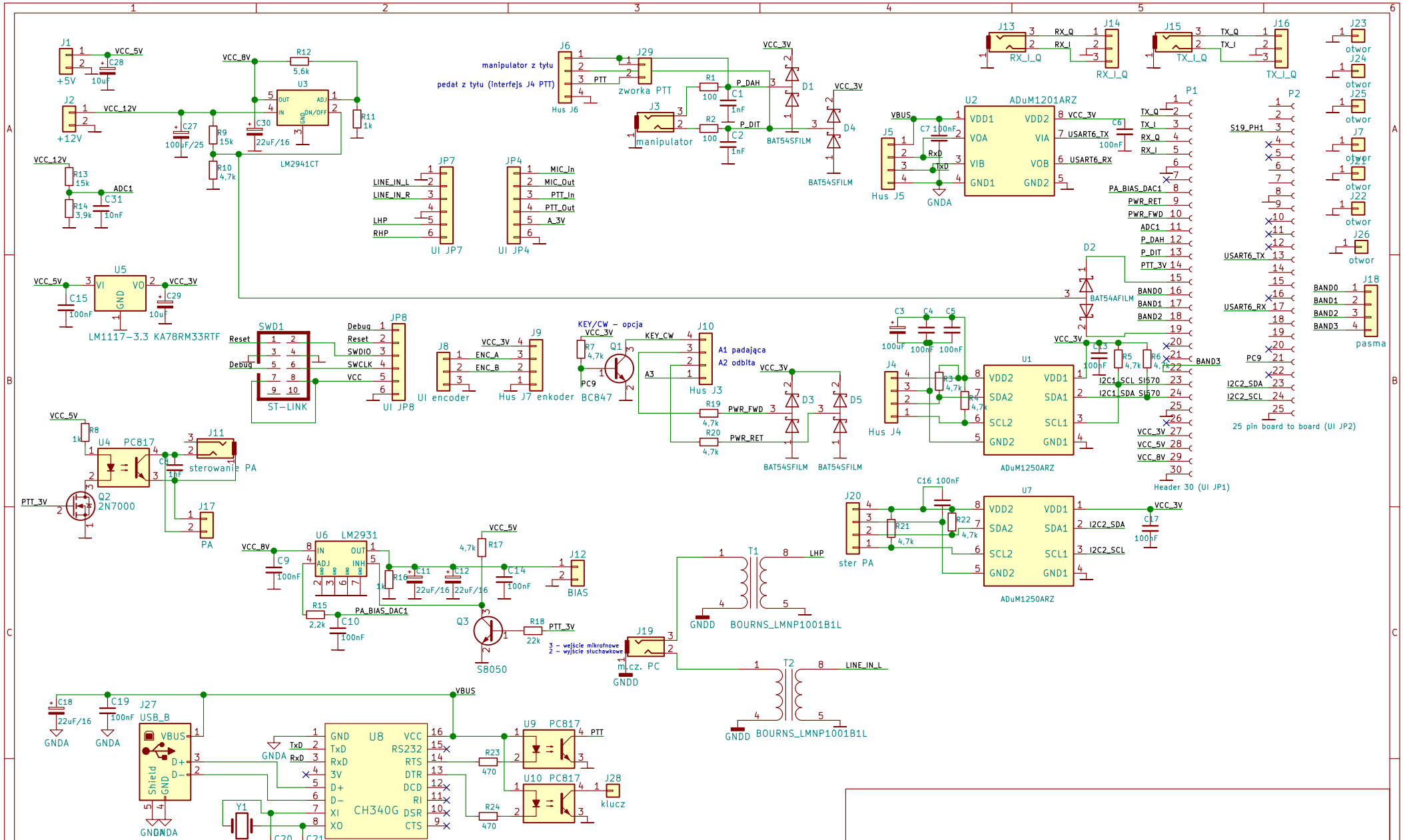

SP3JDZ

Sheet: /

File: adapter_OVI40_UI.sch

Title: Adapter pomiędzy OVI40 i Husarkiem DSP

Size: A4	Date: 2018-09-09	Rev: 1.0
KiCad E.D.A. kicad 4.0.7		Id: 1/1